2GO KEYLESS™

iKEY RS

PASSIVE KEYLESS ENTRY

ALARM –REMOTE START

PUSH BUTTON IGNITION

Installation & User Guide

Another exciting product from

Digital Guard Dawg, Inc.

www.DigitalGuardDawg.com

877-246-5395

Package Contents …… 4
Pre-Installation Information and Preparation 5
Major Component information.....6

Part #1 PKE Passive Keyless Door Lock & Alarm.....8
Door Lock & Alarm Module (Harness Connections).....9
Door Locking System Wiring..... 11
Door "Open" Triggers..... 13
Antenna Installation ……..... 15
Function Jumper Set & External Siren Diagram.....16
Door Lock Wiring Diagram Appendix "A" & "B"…….…… 25
PKE Module Wiring Diagram …….…….... 27

Part #2 PBS Push Button & Remote Start.....17
Different Types of Push Button Start Installations.....18
Push Button Start Module (Harness Connections).....20
Start Button Dimensions.....24
Push Button Start Wiring Diagram …….…… 28
Push Button Start High Current Wiring Diagram….…… 29
Basic System Operation.....30

IMPORTANT

1) This product must be installed by a qualified professional according to these instructions and observing all safety features.

2) The Digital Guard Dawg Inc. accepts no responsibility for any electrical damage resulting from improper installation of the product, be that either damage to the vehicle itself or to the product.

3) Before starting ensure the vehicle to be installed has proper grounding and no electrical shorts.

4) Completely read the Product Installation Guide carefully before beginning any work.

FCC NOTICE

This device complies with part 15 of the FCC Rules. Operation is subject to the following two conditions: 1. This device may not cause harmful interference, and 2. This device must accept any interference received, including interference that may cause undesired operation. FCC WARNING This equipment has been tested and found to comply with the limits for a Class B digital device, pursuant to Part 15 of the FCC Rules. These limits are designed to provide reasonable protection against harmful interference in a residential installation. This equipment generates uses and can radiate radio frequency energy and, if not installed and used in accordance with the instructions, may cause harmful interference to radio communications. The manufacturer is not responsible for any radio or TV interference caused by unauthorized modification to this equipment. Such modifications could void the user's authority to operate the equipment.

1 Package Contents

The ***2GO*** **KEYLESS™ PKE- & PBS** systems come in individual boxes. The following is a list of components included with each kit:

PKE Door Lock & Alarm Kit:

1 – Door Lock & Alarm Control Unit

1 – RFID iKey™

1 – RFID Emergency Card

1 – Door Lock & Alarm Main Harness - 7 PIN

1 – Door Lock & Alarm Accessory Harness - 7 PIN

2 – Front Main Antennas

1- Antenna “Y” adaptor

1 – Emergency Backup Antenna

1 – Dual Color Dash Mounted LED Indicator

Push Button Start Kit:

1 – Push Button Start Control Unit

1 – Push Start Button

1 – Push Button Main Harness - 8 PIN

1 – Push Button Accessory Harness - 10 PIN

1 –Installation Guide / User Manual

2 Pre-Installation Information and Preparation

Overview:

Completely read this manual and review the wiring diagram carefully.
It is recommended that you complete your installation in two parts.

Part 1~Installation of the **Door Lock and Alarm module & Harnesses**.

Part 2~Installation of the **Push Button–Remote Start & Harnesses**.

1. Always install in a well-lit, dry, covered area away from the elements and keep at least one window open during installation to avoid a lock out.

2. Locate necessary wires related to the installation (most required wires are under driver dash or kick panel areas). Use only a digital multi-meter to verify signal wires. Please be aware of surrounding metal and prevent accidental grounding of wires through various tools being used during the installation process.

3. Disconnect the ground wire (-) terminal from the vehicle's battery prior to making ANY connections. To avoid accidents, it is recommended to remove related fuses from sockets before making connections and put them back during the very last steps.

4. Mount the Control Module in a secure area, away from vehicle computers and heating/air conditioning ducts. The location should be convenient for your installation, but well hidden from thieves. Try to mount the unit as far away from metal objects to increase the range of the iKey™ Transmitter.

5. Route the wires of the harnesses along factory wiring to areas in which the different connections will be made. DO NOT plug the two wiring harnesses into the Control Module until all connections have been completed. When running the harness wires through the vehicle, be careful to run them where they could be damaged or shorted to GROUND. Keep them away from ALL MOVING PARTS of the vehicle or where high heat could damage their insulation. Always protect the harness wires where they pass through holes in metal panels by using rubber grommets. Secure wires to factory harnesses using zip ties and use wire loom where appropriate.

6. Once the control unit is connected, begin function tests only after verifying and ensuring all wires have been connected and insulated properly. Do not power up the module before it is properly grounded. If the unit is powered before being grounded, serious damage to internal components could occur.

Immobilizer and Data Interfaces

Many vehicles on the road manufactured after 1995 utilize some form of factory security that requires a code that is passed between the key and the vehicle. Different manufacturers use different methods to incorporate this into the ignition cylinder of which RF or a key (or cylinder) impregnated resistor is the most popular. These types of security are in place to disable the “cranking” of the motor and are known as **Immobilizers**.

Data Interfaces have become popular with aftermarket products as obd2 and CANbus interfaces have evolved over the last 15 years. Aftermarket Data Interfaces utilize analog wire signals from 2GO-Keyless™ system and translate them into data that the vehicle can use to lock / unlock doors, monitor door open / closed status, etc. In many cases Data Interfaces and Immobilizers are combined into one unit and are manufactured by various aftermarket companies.

In vehicles manufactured after 1995 an **Immobilizer or Data Interfaces** module may be necessary for the installation of Keyless Entry and Push Button Start of the vehicle while maintaining all factory features. This manual will serve only as a general guide to the installation of the 2GO-Keyless™ system, consideration of Immobilizer or Data Interfaces devices and their installation should be done by a professional.

If you need assistance locating an Immobilizer or Data Interfaces device for your vehicle contact us at **(877) 2GO-KEYLESS or 877- 246- 5395**

Control Module and Push Button Start Module: Select a mounting location behind the dash, and secure using cable ties. Be certain that the chosen location will not interfere with the proper operation of the vehicle. Avoid mounting the module to or routing the wiring around the steering column, as the module or wiring could wrap around or block the steering wheel preventing proper control of the vehicle. Do not mount the modules in the engine compartment, as it is not waterproof.

Start Button: The system Start Button is used to control your Start, ON, ACC & STOP modes of your vehicle's ignition system. In addition, the Start Buttons LED provides a visual indication of when the system has recognized a valid RFID iKey™ and when the vehicle is ready to be started. Typically the Start Button is installed in the dash or center console of the vehicle, but it can be installed in any location within the length of the buttons 32" harness. Your choice of Start buttons will determine the diameter and depth of hole needed for button installation. Be sure and confirm that your have ample room behind the dash for the type Start Button you have choose. Specific Start Button dimensions can be found on page 24 of this manual.

Dash Mounted LED: A dual color (Red / Blue) LED is also included in this kit. It is a secondary visual indicator of the system mode. This LED is not required to be used, but if installed will indicate when the systems alarm features Arm and Disarm, as well as provide a "Flashing" warning to notify wood be thieves that your vehicle is protected. If installing this LED, locate it where it can be easily seen from outside the vehicle, yet not be distracting to the driver. Once a location has been selected, check behind the panel for wire routing access, and confirm the drill will not damage any existing components as it passes through the panel. Drill a 19/64" (7.6mm) hole, and pass the wires from the LED through the hole, from the front of the panel. Firmly press the body of LED into the hole until fully seated.

(Optional) Siren: If you are installing a Siren instead of connecting to the vehicle's OEM horn, you will need to open the control module case and change the systems jumper set (JP4) according the wiring diagram. * for more information see "Jumper Sets" page 16. Always mount the Siren away from heat sources such as radiators, exhaust manifolds and turbochargers. Mount it in an area where it will not be in the way for mechanics and so that it cannot be easily reached from below the vehicle. Mount it so that its sirens opening points down to prevent it from collecting water.

4 Part #1 Door Lock & Alarm

The Door Lock and Alarm Module will provide completely automatic operation of all vehicle doors and all security functions.

PKE Module

iKey™

As you approach your vehicle doors will unlock upon seeing a valid iKey™.

Walk away from the vehicle, all doors auto lock and security features arm

Installation should begin with selecting a location to mount the system module and locating of all signal wires listed below. Once a location has been selected, mount the Door Lock / Alarm module and connect wires according the systems wire diagram.

5 Door Lock & Alarm Module (Harness Connections)

Connect the Ground wire first before making the 12-volt connections to the Module. Powering up before grounding could damage the system!

PKE Door Lock & Alarm ~ Main Harness (7-Pin)

Use wire color for identification, *Actual wire order in harness m ay be different.*

Wire		Description
1	**Red (+) 12V Battery**	Connect to the 12V supply wire of the Ignition harness. Ensure that the OEM power wire is fuse is more than 15A. **Note: certain new vehicles have no suitable 12 volt source at the IGNITION switch (the 12 Volt wire is too small to supply the necessary current). In this case, the fuse box, or the B+ connection on the battery is recommended.**
2	**Black Chassis Ground (-)**	This wire is the system Ground and must be connected to bare, unpainted metal Chassis or true Body ground. It is preferable to use a factory ground bolt rather than a self-tapping screw. ***Screws tend to get loose or rusted over time and can cause erratic problems.***
3	**Gray (2 Wires) Parking Light**	This wire is provided to flash the vehicle's parking lights. Connect one gray wire to the output side of one of the vehicle's parking lights. Or use both gray wires to connect to the L & R turn indicator wires. If only one wire is required, remove fuse and terminate second gray wire appropriately.
4	**Purple (-) OE Horn or Siren**	Connect to the vehicle's OEM horn or to an external Siren. Connect directly to NEGITIVE side of vehicle's horn control wire or connect to a siren using the diagram on page 16 of this manual. The control wire will usual be under the steering wheel and should be negative when honk.
5	**Blue (-) Unlock**	If you have a negative-trigger central locking system, directly connect this wire to the door **UNLOCK** signal wire. Please refer to page 11 for more information on other central locking system trigger types. ***If a Data Interface is used, connect to modules "Door Output Status wire".***
6	**Green (-) Lock**	If you have a negative-trigger central locking system, directly connect this wire to the door LOCK signal wire. Please refer to page 11 for more information on other central locking system trigger types. ***If a Data Interface is used, connect to modules "LOCK" input wire.***
7	**Brown Trunk Release (-)**	500mA negative output This output is used to control Trunk release (1-sec. pulse) and operates only when Ignition is OFF.

Door Lock & Alarm ~ Accessory Harness (7-Pin)

Wire		Description
1	**Red** **Vehicle ON Detect (+)**	This wire is for sensing when the vehicle is ON. It should be connected to an Ignition wire that has +12 V when the Ignition Key or Push Button Start is in the and **ON (RUN)** position. **Special instructions when using Remote Starter:** Connect to different ACC wire if the vehicle has 2nd ACC.
2	**Green** **Door Trigger** **Default (-) Negative**	This wire senses when a vehicle **"door open status"**. If you have a negative-trigger door switch system, you can directly connect this wire to the door switch signal wire. If you have a positive–trigger or are not sure, refer to page 13 for more information on door switch system trigger types. **Note:** Default function setting is Negative door switch. Change PKE modules jumper (JP1) to Positive when vehicles use positive-switch Dome Light circuit. *If a Data Interface is used, connect to modules "UNLOCK" input wire.*
3	**Blue**	Connects to Window Rollup Module "Optional"
4	**Brown (+) Brake**	This wire senses when you step on the Brake. The wire will be +12V as you depress the brake pedal, and will be ground when release brake.
5	**Purple**	This wire provides the data control signal for the 2GO-Keyless™ Push Button – Remote Start Module. Connect this wire to the (Purple) input signal wire of the Push Button Start module.
6	**White OE Alarm Factory Disarm output (-)**	If needed, this wire can provides a Ground when Armed or Disarmed signal that can be used as a "Factory Disarm Wire" for a OEM Alarm system
7	**EMPTY**	

6 Door Locking System Wiring

All power door locking systems utilize switches or a central computer called the Body Control Module (BCM) to control the locking and unlocking of the vehicle. The switch is usually located on the door or center console while the BCM is usually located under the Dash. Most locking systems will have at least 2 control wires, one for locking your doors called the LOCK wire, and one for unlocking your doors called the UNLOCK wire.

You can refer to your vehicle's electrical service manual for details on location and color coding of Locking/Unlocking wires or you can find them by tracing the wires from the door switches. Remember to only use a Digital Multi Meter when testing for vehicle wires.

When testing a wire to "lock", your LOCK wire establishes a connection to either a negative or a positive source, this will be the signal to your vehicle to trigger a locking signal to the door lock actuator or BCM to lock. Vice versa if you are testing for "unlock".

Negative and Positive triggers are the two main types of door locking systems. On a negative trigger system your LOCK and UNLOCK wire uses (-) negative sources to signal the vehicle when you activate unlock or lock. In a positive trigger system, your LOCK and UNLOCK wire uses (+) positive sources to signal the vehicle when you activate unlock or lock.

Certain Manufactures such as Dodge/Chrysler utilize a single wire system called a multiplexer. This single control wire uses one wire in combination with resistor values to communicate to the BCM to LOCK and UNLOCK the vehicle. Please refer to **Appendix B Figure 2.**

Aftermarket Data Interfaces

If an aftermarket **Data Interface** is being used, please refer to its manual. The interface may be able to LOCK and UNLOCK the door using the data wires of the vehicle. The Vehicle's Receiving (RX) and Transmission (TX) wires can be referred to in the **Data Interface's** manual. In order to use this feature the systems LOCK (Green) and UNLOCK (Blue) wires must be connected to the **Data Interface's** LOCK and UNLOCK input. **DO NOT USE BOTH THE VEHICLE AND DATA INTERFACE'S INPUTS. USE ONLY ONE AS DAMAGE MAY OCCUR.**

There are various types of central locking systems please verify and confirm the type of door locking system either by digital multimeter and/or through your vehicle's dealer technical support department. Diagrams for making connections for each of the different types of door locking systems are shown in Appendix "A"

Negative or Positive Door Trigger

The Green wire in the 7 PIN Accessory harness is used to sense when a vehicle door is open. It will need to be connected to your vehicle’s dome light circuit or individual door triggers. Generally, most vehicles have an overall signal wire which will trigger a signal no matter which door is opened. Door triggers can be either Negative ***(GM and most Imports)*** or positively triggered ***(most Fords and some Imports).*** You can refer to your vehicle’s electrical service manual for details on location and color coding of the Dome Light or Door Trigger wire(s). Remember to only use a Digital Multi Meter when testing for vehicle wires.

Three different connections may be made to determine the Vehicle’s Door Status.

(1) The Dome Light is a simple circuit of two wires that illuminate a bulb once any door opens on the vehicle. Various Manufacturers also have dome lights that do not immediately turn off once all vehicle doors are closed. In this case, when Dome Light Delay is present, it is preferable to use an alternate means to determine the Door Status.

(2) Door Pin Switches are used in many vehicles and their associated wires can be typically found in the driver’s kick panel or near the BCM. If multiple wires are used to determine “Door Status” connections to the 2GO Keyless™ PKE must be independently isolated to each wire to prevent damage to BCM (Appendix B Fig 2).

(3) Data Interfaces can also be used to determine Door Status by using the RX and TX lines of the vehicle while the interface provides an output to the green door status wire.

Once the proper connection type is determined verify the type of door trigger for your vehicle. After locating the proper wire, shut off the interior lights first, then open the driver side's door, keeping the other doors closed; Then check the voltage, if the voltage is ground with the door open and becomes positive voltage when the door is closed, then it is a negative trigger type. Conversely, if the voltage is positive with the door open and ground when closed, then the door is a positive trigger type. This type of test can be used on the Dome Light connection as well as Do

or Pins.

Note: Do not confuse the TWO GREEN Wires of the Accessory and Main harnesses.

WARNING: Do not use the Green wire if the vehicle has + 12 Volt output type door switches until you have changed the **JP1** jumper position.

8 Antenna Installation

The 2GO Keyless™ PKE has two ***Main System antennas*****,** as well as an ***"Emergency Backup antenna".*** The Front and Rear (Main) antennas are used for the function of detecting your systems **iKey** as you walk near your vehicle. The **(*Emergency Backup antenna)*** is an exclusive 2GO Keyless safety feature that provides a secondary method of gaining access to and starting your vehicle in the event of a lost or damaged iKey.

Main Antennas

Emergency Backup Antenna

The Front (Main) antenna is your **primary** system antenna. It is not necessary to use both main antennas If antiquate range is achieved with only the Front main antenna. The **"Y"** antenna connector harness provided MUST be use even when only one antenna is installed. The second Main antenna is used to extend coverage area and might be used for the rear hatch of an SUV or simply to extend the coverage area of the driver's door. The most important considerations are: **(1) Mount the antenna so it is NOT behind or touching a metal surface. (2) Mount the antenna so that it will not change orientation or position once installed.**

Main (Front) antenna location Installation of the systems Main Antenna is a very individual matter depending on the vehicle. There are a number of acceptable locations for mounting your system antenna. On some vehicles a location behind the dash will provide acceptable range, but on others the amount of metal in the dash will dampen the antenna signal will not prove to be sufficient. The upper or lower corners of the windshield are typically excellent antenna locations, Fig.1. Note: Initially secure the antenna using 3M double sided tape. Test several different locations to determine which the best for your vehicle is. : Leave positioning of the system antenna as a final part of your installation. Leave enough antenna wire loose so that different locations can be tested. Additional good locations for the main antenna install include: The passenger portal style window Fig.2. or in the vehicle headliner.

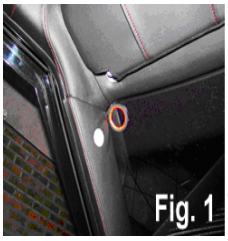

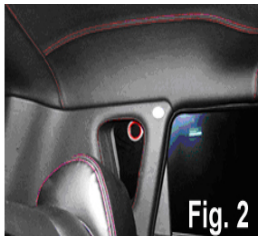

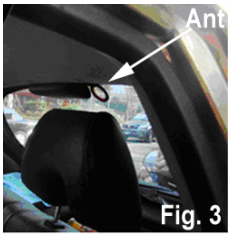

2nd antenna / (Rear) location The detection range of the rear antenna is around 3 Feet. Please stick it to the rear glass or side glass to cover the rear hatch and two back doors. Fig. 3

Backup antenna location The Backup Antenna can be installed anywhere. It is used only in the event you need to gain access to and start your vehicle without a system iKey™. The sensing ability of the Backup antenna is very short (only 4-6 inches), A recommended location for this antenna is in the front or rear window's top, bottom or side edges. Once installed be sure to test that the antenna can easily detect the Emergency Backup Card.

Door Lock & Alarm Module Function “Jumper Set”

On the side of the control module there is a set of Four Jumpers that are used to select specific module functions.

(Side View of Module)

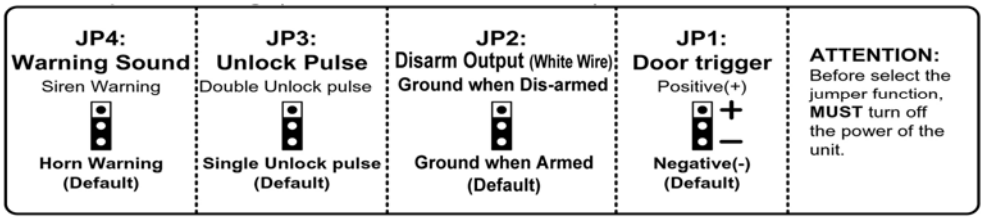

JP1: Door Trigger (-) ←→ Door Trigger (+):

The default setting is Negative Door Trigger. If the user’s vehicle is Positive Door Trigger switch the JP1 to Door Trigger (+).

JP2: Factory Disarm Ground when Disarmed / Ground when Armed

JP4: Selects either Single or Double pulse door locks

JP4: Selects either Horn warning ←→ Siren Warning:

10 Part #2 Push Button Start

The 2GO Keyless™ PBS Module (*Push Button –Remote Start*) contains all the system relays to operate Ignition and accessory circuits. The PBS Module eliminates the *"spaghetti look"* of hand wiring multiple external relays. Independent switching of two Ignition circuits and one accessory circuit allows The PBS Module to be configured in several different ways: One Ignition circuit can be turned OFF during starter "crank" to reduce battery load while another Ignition and Accessory circuits stay ON

Basic installation consists of; mounting the PBS module under your dash and mounting and connecting the Start Button. Lastly, making connections to wires that connect to your vehicles Ignition switch, Brake pedal, Neutral Safety switch.

Newer Vehicles with Factory Immobilizers or Multiplex Wiring.

2GO Keyless™ can be installed on virtually any new vehicle and add the Convenience & Security of keyless operation. 2GO Keyless™ will integrate with even the most sophisticated vehicle electrical systems and will provide completely keyless operation similar to systems found on the today's most prestigious vehicles.

As discussed earlier in **"Section 2",** Installations of vehicles manufactured after 1995 may require an additional **Immobilizer bypass module** due to existing factory security systems or vehicles manufactured after 2000 may need a **Data Interfaces**. These modules will allow 2GO Keyless™ to work properly in conjunction with factory security or vehicle data systems. If needed, the correct module for your vehicle should be available at any qualified Alarm shop. The two major manufactures of these modules are DEI – "Express" , or iData.

Locking Steering Columns

For almost 30 years now vehicles have had one or another type of "Locking Steering Column" system. These range in design from mechanical to electronic, simple to involved to bypass.

There are two basic approaches:
First, determine which type of Locking mechanism you have: Mechanical or Electronic.

If you have an **"Electronic"** lock it will simply be a matter making an additional connection during installation that supplies the correct unlock signal to the lock solenoid at the time the vehicle is started.
If you have a "Mechanical" lock there are two methods.

If you have a "**Mechanical"** lock: All Mechanical steering column locks can be removed. But in many cases this requires partial disassembly of the vehicles steering column. If your installation goals include completely removing the column lock, one of the best sources for information on this is a qualified body shop; they remove and replace column locks frequently as a matter of repairing attempted auto thefts.

Another popular option for Mechanical steering locks is to simply “Release” the lock. If you are not concerned about the lock actually being “removed”, but could be happy simply having it “released” and hidden, there is another very popular option that will work well for a large number of vehicles. With this method rather then removing the existing steering column lock; you simply “Release it” by leaving a cut key shaft in the lock. Simply use one of the vehicle’s ignition keys or make a duplicate, then cut the “Head” of the key off and insert the shaft into the lock, then turn it to the “ON” position to release the locking mechanism. Make sure to leave enough of the key shaft so some sticks out of the keyhole. Use a pair of needle nose pliers to turn the key. This will release the locking steering column, but since 2GO Keyless™ is controlling the vehicles ignition system the vehicle will not be able to be operated with out the iKey™ being present.
In conjunction with this approach, in many vehicles the Ignition switch can be unbolted and moved off to the side or behind the dash. If your switch does not unbolt from the steering column, usually a plastic or metal “Cap” can be found to hide the existing switch hole. This approach usually saves a great deal of installation time and for many vehicles is the preferred installation method.

*** *When using this method on GM vehicles that have the security chip in the key shaft this will also eliminate any further need to bypass the factory security system since the chip is still in the lock.*

12 Push Button Start Module (Harness Connections)

Once you have decided which type of installation is right for your vehicle. Locate the vehicle Main Ignition switch harness. Begin by locating all Ignition and signal wires listed below and then connect wires according the wire diagram. **Make sure to connect the Ground wire first before making the 12-volt connections or powering up the PBS Module**

Push Button Start ~ Main Harness (8-Pin)

	Wire	Description
1	**Purple**	**Not Used**
2	**White** **Starter (+)**	Connect to the wire going to the Start Solenoid
3	**Red** **(+)** **12V Battery**	Connect to the 12V supply wire of the Ignition harness. Ensure that the OEM power wire is fuse is more than 15A. **Note:** certain new vehicles have no suitable 12 volts source at the **IGNITION** switch (the 12 Volt wire is too small to supply the necessary current). In this case, the fuse box, or the **+** connection on the battery is recommended.
4	**Blue** **Ignition #2** **(+)**	This wire is provides a circuit that switches OFF during starter cranking. Use for A/C or other circuits not necessary during starting.
5	**Green** **Ignition #1** **(+)**	This wire is the primary Ignition circuit that remains ON during starter cranking. Use to provide power to all primary Ignition components
6	**Black** **Ground** **(-)**	This wire is the system Ground and must be connected to bare, unpainted metal Chassis or true Body ground. It is preferable to use a factory ground bolt rather than a self-tapping screw. **Screws tend to get loose or rusted over time and can cause erratic problems.**
7	**Red** **+12V Battery**	Connect to the 12V supply wire of the Ignition harness. Ensure that the OEM power wire is fuse is more than 15A.
8	**Yellow/Green** **Accessory #1** **(+)**	This wire provides power to vehicle Accessories such as radio and climate control fan. This circuit also switches OFF during Starter cranking but is able to be independently switched ON as “Accessory Only” mode

Push Button Start ~ Accessory Harness (10-Pin)

Wire		Description
1	**Orange Data Module Trigger**	This wire provides a constant 250mA positive output 1 second before the vehicle is started to activate a Data or Bypass module
2	**Red +12V Supply**	This wire is a +12v constant supply wire used to supply power to External High Current Relays (optional)
3	**Gray** (-) **Factory security bypass**	This wire provides a constant 500mA negative output while the vehicle is in **ACC**, **(RUN)**, and **CRANK** position. The output becomes active 0.5sec before ACC is on, and becomes inactive when PSB shutdown the vehicle. The output can be used to control external relays, bypass kits, etc.
4	**White (-) Neutral Safety input**	This wire will test for a ground from the gear selector either in PARK or NEUTRAL. This will prevent the vehicle from accidentally being remote started while in a drive gear. **This input MUST set at ground in order for the remote start function to operate.**
5	**Purple PBS Control**	This is the input wire for receiving an **Authorization Signal** from an option 2GO-PKE / Passive Keyless Entry Module.
6	**Pink For "Diesel" Vehicles Only"**	Connect this wire to the wire in the vehicle that sends the signal to turn on the WAIT-TO-START bulb in the dashboard. (Also known as "Glow-plug light".) In most diesels the wire is negative (ground turns on the bulb) and this wire can be directly connected to the vehicle. If the vehicle uses a positive wire (12V to turn on the bulb) a relay must be used to change the polarity.

7	**Brown** **(+) Brake or Clutch**	This wire senses when you step on the Brake. It allows the system to enter "Start" mode. The wire will be +12V as you depress the brake pedal, and will be ground when release brake.
8	**Blue** (-)	**Optional:** External High Current Relay Control for Ignition **#2** ****see page 29*
9	**Green** (-)	**Optional:** External High Current Relay Control for Ignition **#1** ****see Page 29*
10	**Yellow** **(AC+)** **Vehicle Tachometer Sense wire**	This wire tells the PBS Module if the engine is running or not. It requires at least 3 volts (AC) and 20 Hz (or faster) at idle. Common Tach references are: the negative side of an injector, the negative side of an Ignition Coil, or the Engine Control Module (ECM). ** See TACH Learn Mode Pg._____

HIGH CURRENT NOTICE:
For Heavy Duty / High Current Ignition circuits requiring greater than 40 AMPS. On vehicles with dual AC, extensive lighting or other high current accessories with higher then normal current requirements you must use the additional external high-current relay schematic found on Page 29

Neutral Safety Switch Interface

Connect this wire to the PARK/NEUTRAL switch in the vehicle as shown in Figure A. This wire will test with ground with the gear selector either in PARK or NEUTRAL. Connected properly, the vehicle will only start while in PARK or NEUTRAL.

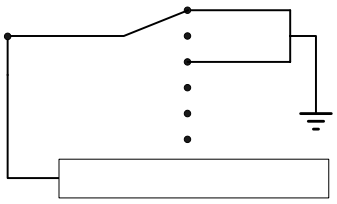

Figure A

Additional Safety Recommendations:

A toggle switch is suggested to be installed as shown in Figure B, therefore the remote start function can be disable when necessary. For example, the vehicle is in the servicing, or parks in an enclosed or partially enclosed area without ventilation.

In some vehicles, the PARK/NEUTRAL position switch activates a factory starter lock out that will not allow the starter to operate in a drive gear. In these vehicles, connect this wire to chassis ground. Or connect this wire to a toggle switch as shown in Figure C. Connect the other wire from the toggle switch to chassis ground.

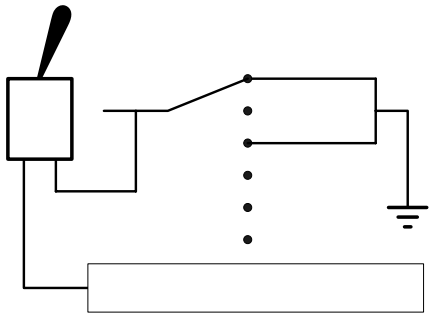

Figure B

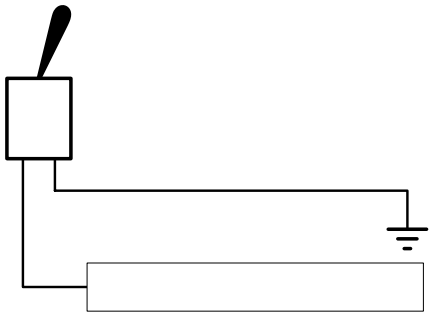

Figure C

With the type of vehicles that do not have interface of the neutral safety switch, connect this wire as shown in Figure C.

IMPORTANT! Always perform a Vehicle Safety Check to verify that the vehicle cannot be started in ANY drive gear and that the override switch is functioning properly.

PARK

R

NEUTRAL

D

1

2

NEUTRAL SAFETY INPUT

Pre Testing:

It is always also always a good idea to do the following test to confirm basic system function and make sure everything up to this point is connected correctly:

1st Shut all vehicle doors and remove all the systems iKey(s) to a distance of at least 25' feet away from the vehicle. The systems LED should flash alternately RED / BLUE indicating the system has armed. *** *If the system status LED does not begin flashing RED / BLUE you need to re-check your Door Trigger connection. The system must see a ground signal on the PKE Accessory harnesses Green wire when you're close your doors to arm.*

2nd Pick up one of the systems iKeys and approach the vehicle. At approximately 6 feet from the vehicle the system should dis-arm your doors should unlock and the system status LED should change to BLUE. Showing your iKey has been recognized. At the same time the LED on the START BUTTON should illuminate.
*** *If your doors unlock and the systems status LED changes to BLUE but the Start Button LED does not illuminate, Re-check the purple communication wire connection between the PKE & PBS module.*

Once you have confirmed basic system function and that your Neutral Safety Switch connections are correct you are ready to program your vehicles Tach signal.

Tachometer Programming

After making all your connections to both the PKE & PBS modules, the final step is to program the system to learn your vehicles tachometer signal. This is necessary so that the systems Remote Start & One Touch Starting functions can determine when you vehicles engine is running. The Tach wire on the PBS tells the Module if the Engine is running or not. It requires at least 3 volts (AC) and 20 Hz (or faster) at idle. Note: Be sure that the Yellow PBS Tachometer signal wire is hooked to a good source.

The best Tach references are: the negative side of an injector, or the negative side of an Ignition Coil, or the Engine Control Module (ECM). *(Note: we do not recommend using the ach reference wire from a data module as these often do not give an adequate signal)*

***** Prior to programming your vehicles Tach signal** it is critical that you have first made the proper Interface connections to with the vehicles Neutral Safety Switch. Shown below

Tech Programming Procedure

With the PSB in OFF status, enter the vehicle with your iKey. The LED on the Start button will come on Amber.

To enter the system into Tach Learning Mode:

Press and HOLD the Start Button down.

Next, Press the Brake Pedal five (5) times quickly.

After the 5th push of the Brake pedal, keep the pedal fully depressed.

Next, release the Start Button and continue to hold the Brake pedal down.

The LED on the Start Button (Lexus Button) will alternately flash Green and Red as the system enters Tach Learning Mode. You will now have 25 seconds to start your engine to allow the PBS to learn the vehicles Tach signal.

Next, Push the Start Button and crank the Engine, release it when the Engine is started. Allow the engine to warm up enough to obtain a typical idle RPM. (At least 30 seconds but a maximum of 2 minutes) then release the Brake Pedal. Your engine will keep running if programming was successfully, or shutdown immediately if the system failed to learn your Tach signal. * If the system does not learn your Tach signal on the first attempt, try a couple more times. If it is still unsuccessful, you change the Yellow Tach sense wire to a different Tach reference location.

APPENDIX "A"

DOOR LOCK WIRING DIAGRAMS

NEGATIVE PULSE LOCK SYSTEM

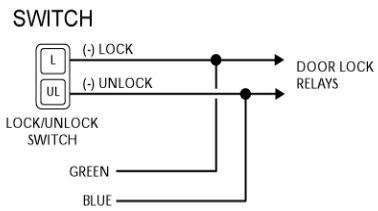

POSITIVE PULSE LOCK SYSTEM

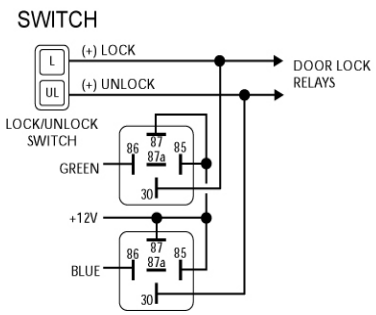

ADDING ACTUATORS

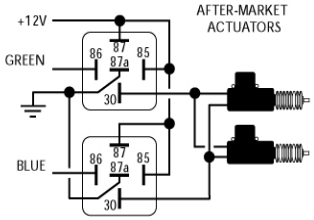

REVERSE POLARITY LOCK SYSTEM

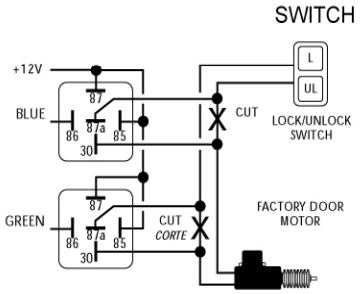

VACUUM LOCK SYSTEM

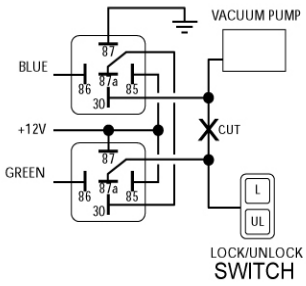

APPENDIX "B"

Figure 1

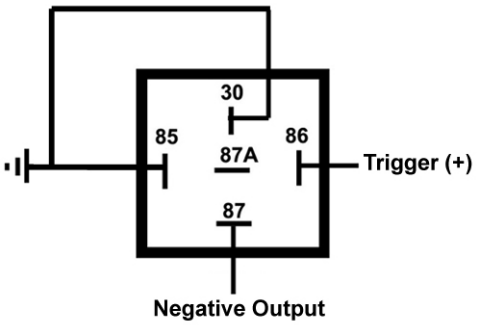

Figure 2

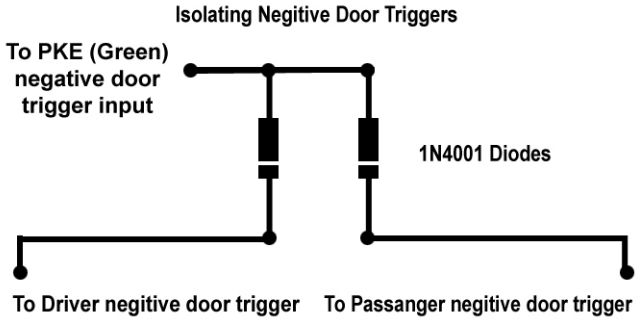

Figure 3

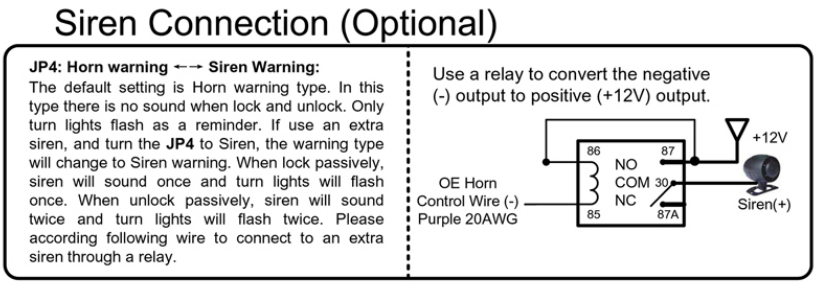

14 PKE Module Wiring Diagram

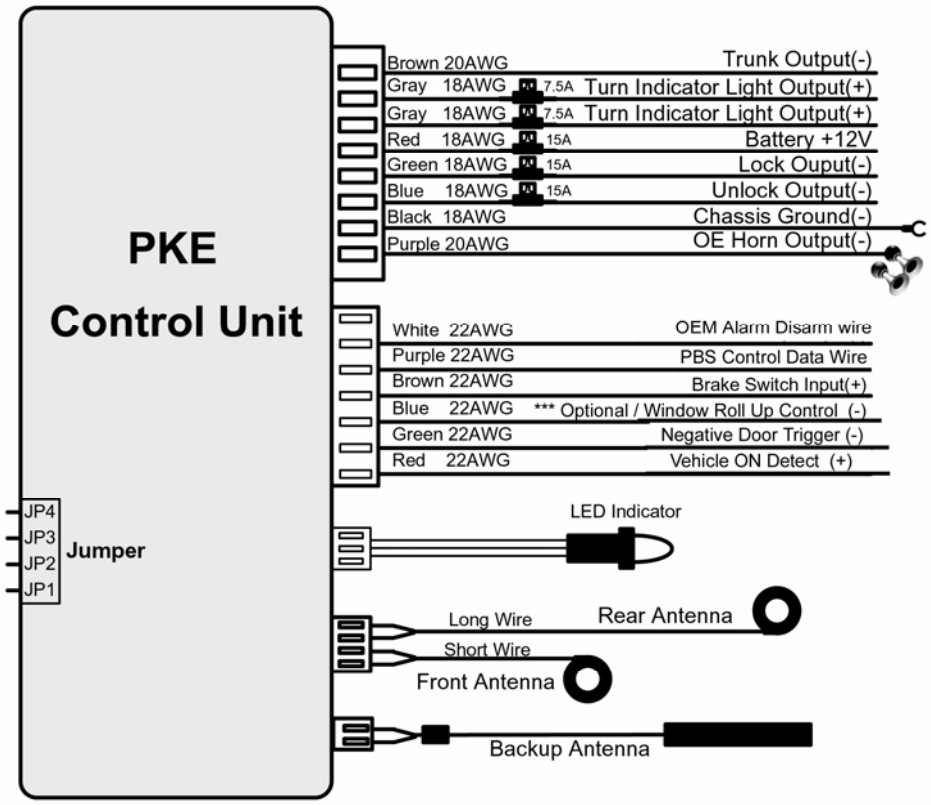

FOR UNIT TO FUNCTION CORRECTLY YOU MUST CONNECT:

(Brown) Brake Pedal Wire and (Green) Door trigger wires.

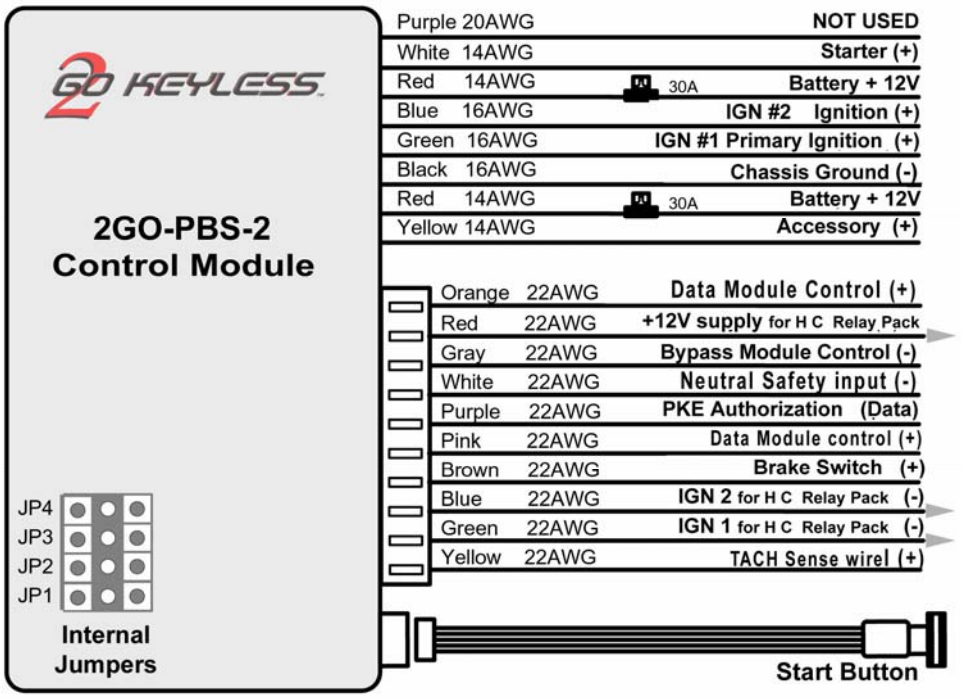

The PBS module is designed with four 40Amp internal relays. One for each of the primary system circuits: IGN 1 / IGN 2 / ACC / START

PBS High Current Wiring Diagram
For Ignition Circuits over 40 AMPS

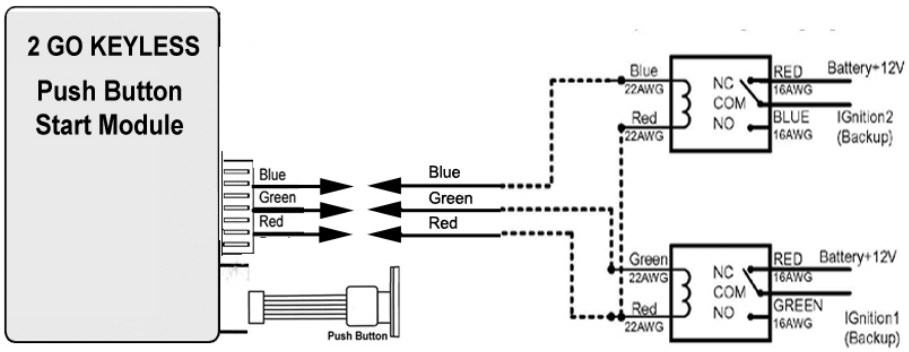

.

<u>For High Current Ignition applications requiring greater than 40 Amps for each ignition circuits. you must use the additional pre-wired pair of external 40AMP relays included with your PBS Accessory harness</u>. This will greatly increase your ignitions current handling. These should be used on Heavy duty vehicles, dual AC systems, extensive Lighting, Audio or other accessories with higher then normal current requirements.

As you approach your vehicle upon seeing a valid iKey™:

~Vehicle doors will unlock

~Parking lights will flash Twice

~If connected the Siren / Horn will “Chirp” Twice

~The LED in the Start Button will light

When you enter the vehicle:

*If you **do not step on the Brake Pedal** the system will work as follows:*

~Push the button once and turn on the ACCESSORIES

~Push the button once more and on IGNITION 1 & 2 & ACCESSORIES

~Push the button again and switch all circuits OFF

*If you **step on the Brake Pedal** the system will work as follows:*

~Push and hold in the start button and the STARTER will crank.

~The driver decides when to release the start button to stop starter cranking.

~Doors will lock 30 seconds after vehicle starts and brake is released.

To turn engine OFF

~**Depress the Brake and Push and HOLD the Start button in for 2 Seconds**

~Doors will automatically unlock when engine is turned off.

**** For safety, Doors will not auto unlock if engine has been on under 3 Minutes*.

When you walk away from the vehicle:

~All vehicle doors will auto lock and security features will arm

~Parking lights will flash Twice

~If connected the Siren / Horn will “Chirp” Twice

The iKey™

Replacing the battery:

Use CR2032 lithium disk battery available at most drug stores.
Make sure the battery is inserted with the correct polarity.

Be extremely careful not to bend the battery contacts when inserting the new battery. Before inserting the new battery, slightly push the battery contacts towards each other to ensure that that good contact is made with the new battery. Replace battery with dry hands and ensure there is no debris in the battery compartment. Also, avoid touching or removing any part in the exposed iKey™.

Other important information about your iKey™:

~Contact with Metal will interfere with your iKeys™ ability to communicate properly with the control module.

~Placing your iKey™ in a pocket behind or next to a cell phone or Keys will interfere with the units ability to communicate and you may notice shorted read range.

~Do not apply any metal stickers or attach metal objects to your iKey™

~Do not leave the iKey™ in high temperature for extended periods of time, such as on the vehicle dash or hood.

~Do not expose or submerge the iKey™ in water.

~Do not leave the iKey™ in close proximity to electromagnetic devices such as cell phones or microwaves.

~Do not attach your iKey™ directly to a metal key ring.

~To attach to a key ring use the strap provided and attach as shown here.

~VERY IMPORTANT: To save the power of vehicle battery, if the vehicle has not been used for 7 days, the systems will quite scanning for the iKey™ and

The unit is awakened by seeing a signal from the GREEN "NEGITIVE DOOR TRIGGER" WIRE. THIS WIRE MUST BE HOOKED UPDURING INSTALLATION.

Additional System Features

Alarm:
If the system could not find a valid iKey™ in range, and the door was opened, or someone tried to start the engine via the ignition cylinder, the system will trigger an alarm: the horn / siren will sound and the turn indicator lights will flash. The horn sounding and light flashing will stop after period of 90 sec when no further vehicle status changes are detected, however the starter will remain disabled.

Alarm Record
Once the alarm has been triggered, the LED indicator will turn red and flash rapidly. If you find the LED in this status when you approach the vehicle, please be aware of the surroundings and pay attention to anything that might have happened to the vehicle.

Open Door Notification
When the user walks away from the vehicle and the doors are not closed\the system will provide an audible warning – double-sound and double-flash for three times After the audible warning, the system will lock the doors immediately. And then, the turn indicator lights will flash for two minutes if any door is still open. At any time, all doors close will terminate the doors open warning.

Ignition Lock Function
The Ignition lock function automatically locks the doors when you step on brake pedal after the start button has been switched to “ACC” or “ON” position and automatically unlock when the ignition key is turned to “OFF”. For security, this unlock function does not work if the ignition stayed “ON” less than 3 minutes.

Locking delay
If you need to work on or near the vehicle for an extended period of time (such as washing the vehicle, maintenance, or repair), it is suggested to place the iKey™ in the vehicle or Switch the ignition to ACC position.

Battery replacement reminder:
Batteries typically should be replaced every 6-12 months. If you approach the vehicle with the iKey™ and the horn/siren sounds five times after the door unlocks, this means the iKey™ battery is getting low and you should replace the battery as soon as possible. These reminders will not stop until the battery has been replaced. You should also change your batteries if you experience extremely decreased transmitter range.

Saving battery power:
There is constant communication between the control unit and iKey™ when the vehicle is OFF and the iKey™ is in range. We suggest to conserve the iKey™ battery power. Use the Ignition Switch or Start Button to switch your vehicle to the

ACC position if you need to wait or rest in the vehicle for extended periods of time

VERY IMPORTANT KEY CODE:

The number on the packaging of your iKey™ is your systems “Key Code” Write it down and store it in a safe place. You will need this number if you would like to order additional iKeys™ or additional systems with matching codes.

Emergency Bypass Key:

If your iKey™ was to become damaged or lost and the system cannot identify it. The vehicle can be started by using the Emergency Backup Card pictured here.

Emergency
Card

A special passive transponder chip inside the backup card can be used to unlock your vehicle doors and start the engine.

To use the Emergency Backup Card enter hold the Emergency Card key within 4 inches of the Emergency Backup Antenna for 30 seconds, the system will disarmed and you will be able to start the engine.

13 Push Button Start Module (Harness Connections)

There are three general configurations used for New and Retrofit keyless installations.

TYPE 1

In the Type 1 configuration only the IGNITION #1 circuit and the system ACCESSORY circuits are hooked up. When the Start button is depressed both circuits energize and remain powered during the entire time the starter is 'Cranking" This configuration works fine on most basic three wire Ignition systems found in most older vehicles.

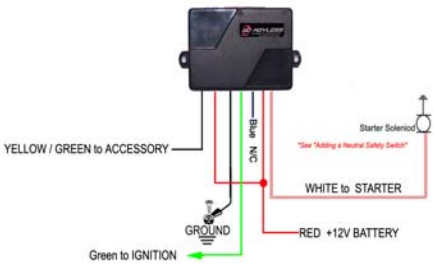

TYPE 2

In the Type 2 configuration there are now two IGNITION circuits. (Ign 1 & Ign 2) IGNITION #1 activates the moment the Start button is depressed, along with the systems ACCESSORY circuit. IGNITION #2 remains "OFF" during starter 'Cranking". This can be useful when wiring a more complex Ignition where you have Computers that need to remain powered ON while the A/C circuits switch OFF during cranking. All three circuits will switch ON when the Start button is released. .

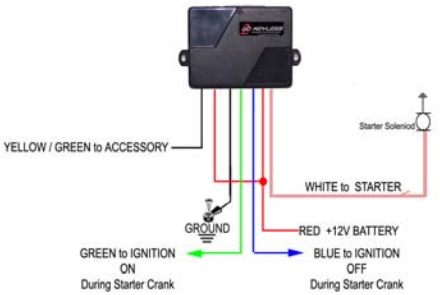

TYPE 3

EZ Installation

For newer vehicles with locking steering columns.

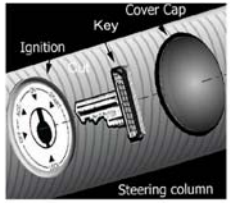

This installation is popular for newer cars with locking steering columns and hard to access ignition switches. It assumes you will be leaving a "Cut" key in the ignition switch and keeping it in the ON position. This will keep the steering column free and allows control of the ignition switch by cutting only the Ignition Feed wire and the Start wire. This simple installation cuts just two wires and uses the existing Ignition switch to distribute power to all the vehicle systems except the start wire. ***2GO*** KEYLESS simply "controls" the power going to the switch and the starter.

- With Ignition Switch "OFF" test and locate the wire that supplies +12V to the Ignition Switch.
- Next, Turn the key to the "Start / Crank" position and test and locate the wire that gets hot during crank and supplies power to your starter solenoid.
- Remove your vehicles "Main" power fuse or disconnect power from the battery.
- Securely attach the systems Ground wire to a FACTORY CHASSIS GROUND
- Cut the +12V and Start /Crank wires and make connections as shown.
- Mount and connect the systems "Start Button"

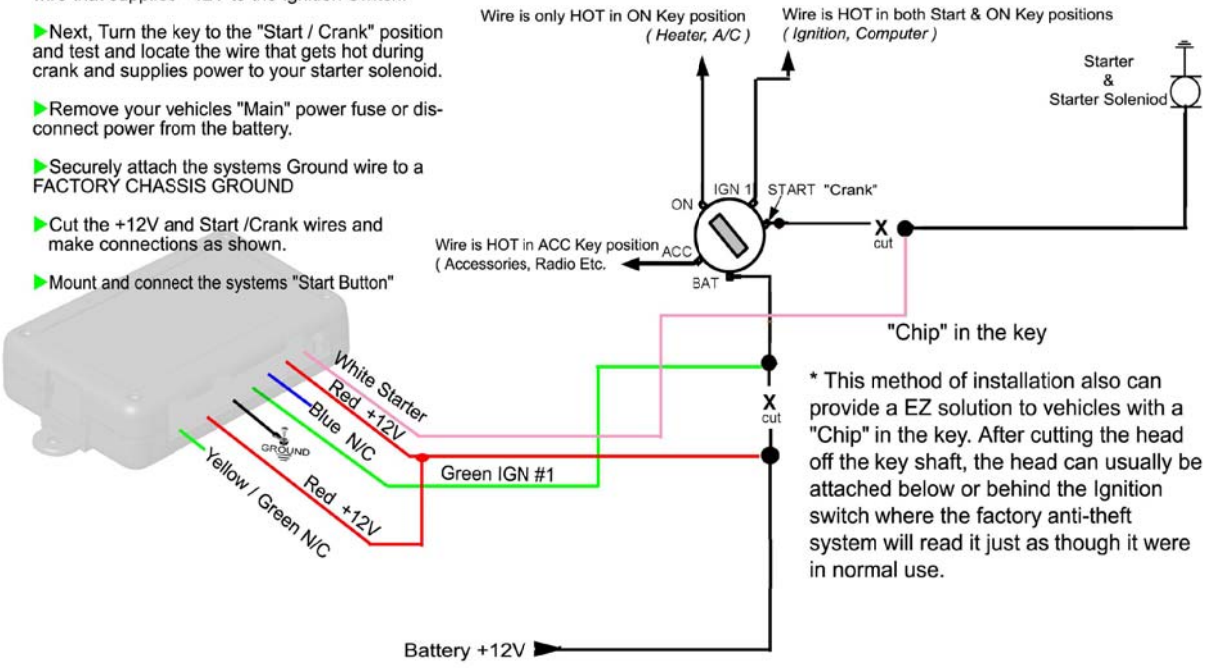

* This method of installation also can provide a EZ solution to vehicles with a "Chip" in the key. After cutting the head off the key shaft, the head can usually be attached below or behind the Ignition switch where the factory anti-theft system will read it just as though it were in normal use.